## WHATS INCLUDED

POWER MODULE

CONTROL MODULE

- BATT grommets, assorted ID
- 1,fem. terminal block, 7pos.(part#xxxxxxxxxxx)
- 1,control module cable strain relief
- 4,10-12AWG spade terminals
- 8,14-16AWG spade terminals
- 4,#8 machine screws
- 4,#8 nuts
- 4,flat washers
- 4,lock washers
- 1,velcro strip
- 1,3" strip double sided tape
- 10,zip ties

# ARC®

## AMERICAN RELAY CONTROLS

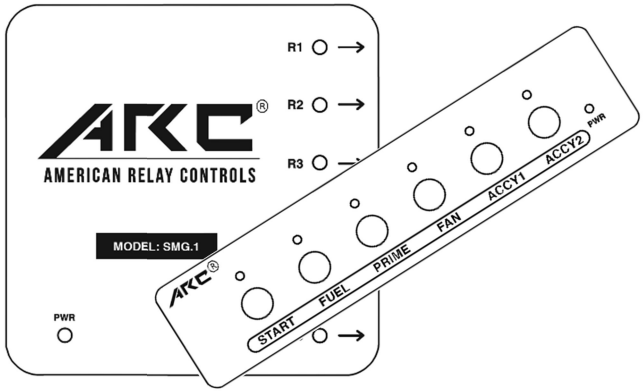


INSTALLATION AND OPERATING INSTRUCTIONS

**OTHER PRODUCTS!**

| Amps @ 12 Volts | LENGTH OF WIRE American Wire Gauge (AWG) | | | | | |
|---|---|---|---|---|---|---|
| | 3' | 5' | 7' | 10' | 15' | 20' | 25' |
| 0 to 1 | 18 | 18 | 18 | 18 | 18 | 18 | 18 |
| 1.5 | 18 | 18 | 18 | 18 | 18 | 18 | 18 |
| 2 | 18 | 18 | 18 | 18 | 18 | 18 | 18 |
| 3 | 18 | 18 | 18 | 18 | 18 | 18 | 18 |
| 4 | 18 | 18 | 18 | 18 | 18 | 18 | 18 |
| 5 | 18 | 18 | 18 | 18 | 18 | 18 | 18 |
| 6 | 18 | 18 | 18 | 18 | 18 | 18 | 16 |
| 7 | 18 | 18 | 18 | 18 | 18 | 18 | 16 |
| 8 | 18 | 18 | 18 | 18 | 18 | 16 | 16 |
| 10 | 18 | 18 | 18 | 18 | 16 | 16 | 14 |
| 11 | 18 | 18 | 18 | 18 | 16 | 16 | 14 |
| 12 | 18 | 18 | 18 | 18 | 16 | 16 | 14 |
| 15 | 18 | 18 | 18 | 18 | 14 | 14 | 12 |
| 18 | 18 | 18 | 16 | 16 | 14 | 14 | 12 |
| 20 | 18 | 18 | 16 | 16 | 14 | 12 | 10 |
| 22 | 18 | 18 | 16 | 14 | 12 | 12 | 10 |
| 24 | 18 | 18 | 16 | 14 | 12 | 12 | 10 |
| 30 | 18 | 16 | 14 | 12 | 10 | 10 | 10 |
| 36 | 16 | 14 | 14 | 12 | 10 | 10 | 10 |
| 40 | 16 | 14 | 12 | 12 | 10 | 10 | 8 |
| 50 | 16 | 14 | 12 | 10 | 10 | 10 | 8 |
| 100 | 12 | 12 | 10 | 10 | 6 | 6 | 4 |
| 150 | 10 | 10 | 8 | 8 | 4 | 4 | 2 |
| 200 | 10 | 8 | 8 | 6 | 4 | 4 | 2 |

FIGURE 1

Check us out on the web or Contact us!

**Website:** www.americanrelaycontrols.com
Technical Support: support@americanrelaycontrols.com
Sales Contact info: sales@americanrelaycontrols.com
Phone: 1-888-486-1272

SPECIFICATIONS:

All ratings at 25°C (unless otherwise noted)
- Ignition input (control power)
Min: 10.5 VDC
Max: 24VDC
-Total System power:
Input Current: 92Amps
Input Voltage: 13.8VDC
Power: 1270 Watts
- Relay 1 & 2
Resistive load
Max Current: 30 Amps
Max Voltage 110VDC, 300VAC
- Relay 3 ~ 6
Resistive load
Max Current: 8 Amps
Max Voltage 30VDC

**CUSTOMER SUPPLIED**

- Battery cable, min. recommended 10AWG, max 4AWG, wire ferrules recommended for 16,18 AWG, fine or stranded wire
- Main battery supply fuse & holder(available from ARC)
70AMP – ARC# FUSE-00007-00
80AMP – ARC# FUSE-00007-00
100AMP – ARC# FUSE-00007-00
- Power wire, output relays 1&2, min. recommended 12AWG
- Power wire, output relays 3-6, min. recommended 18AWG

TOOLS REQUIRED:

- 1/8" slot head screwdriver
- 1/8" Allen/hex key
- 1/4" slot head or #2 Phillips screwdriver
- wire stripper
- diagonal cutter
- ??5/16"?? combination wrench
- 3/16"(.1875") drill and motor
- Hand terminal crimper
- Felt tip marker or pencil

## INSTALLATION PROCEDURE

***WARNING* - Do not mount within 12" of exhaust manifold.**

1) Locate suitable location for the ARC Power Module.
   - Maintain at least 12" of clearance from high heat sources such as exhaust pipes or manifolds.
   - Stay as close as possible to the power(battery) source. This minimizes the need for long battery cable runs which can get costly.

2) Place the Power Module in the desired location and using a marker or pencil, mark the four mounting holes.

3) Using the 3/16" drill, drill holes at the four marked locations.

4) Place the Power Module on the freshly drilled surface and align the four mounting holes with the four drilled holes.

5) Place a flat washer and the control cable strain relief on one of the #8 machine screws. Place a single flat washer on the three remaining screws. Insert the four, #8 machine screws and washers into the mounting holes, keeping the screw with control cable strain relief as close to J2(Figure 3) as possible.

6) On the opposite side, place a flat washer and a lock washer, in that order, on the four machine screws . Thread the nuts on loosely but snug.

7) Slide the control cable through the strain relief in the direction of J2, allowing 4 to 6 inches of control cable to work with.

8) Using a 1/8" slotted screwdriver, attach the Control Module Cable to the terminal block as shown in figure 2. Push the Terminal block screw side up, into J2 of the Power Module as shown in figure 3.

9) Remove any excess control cable slack if any. Tighten the mounting screw with the control cable strain relief to no more than 24 in-lbs. Tighten the three remaining mounting screws to no more than 36 in-lbs.

10) Remove 3/8" of the insulation from the battery cable. Insert the bare cable into J4(figure 3). Using 1/8" Allen/hex key, tighten the hex screw to no more than 50 in-lbs. For safety, be sure all the battery cable wire strands are inside the barrel of J4.

11) Remove approx.. 3/8" of the insulation from the accessory feed wire(s) and crimp on the blade connector that corresponds to that particular wires gauge(AWG).

12) Repeat step 11 for the accessory ground connections while keeping all the wires as short as possible.

13) Connect the fused battery supply cable to the battery or power source. Connection type will vary with application.

14) Following the programming procedure, program each accessory output(R1-R6) to the desired function type.

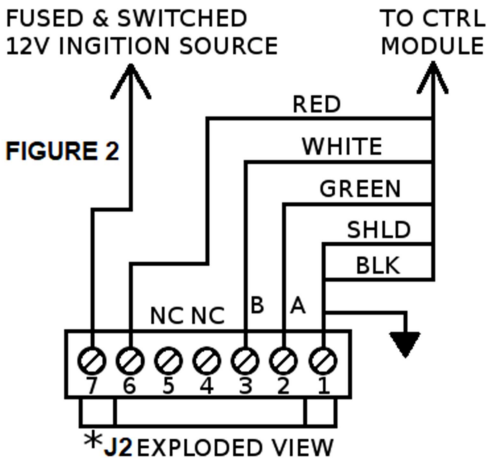


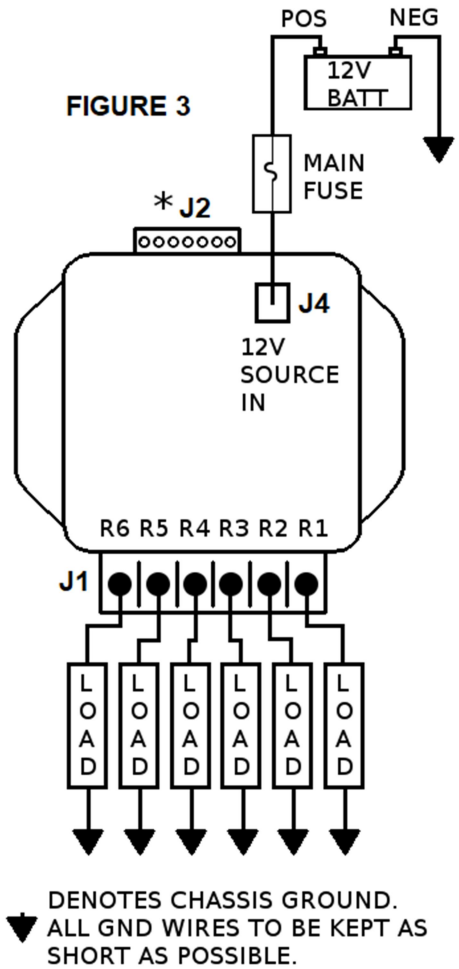


## PROGRAMMING

1) All relay functions are "MOMENTARY" from the factory.

2) Ensure the IGN PWR input is off (at 0 volts).

3) Press and hold the #6 relay button (the button or switch located closest to the PWR LED on the control module) in the "ON" position while applying power to the ignition input.

4) After approx. 3 seconds the unit will enter programming mode. Programming mode is indicated by all 6 button LED's blinking their respective mode setting.

5) Pressing each of the 6 relay buttons cycles through the following 3 operation modes:

   1 - Momentary switch mode. Indicated by one blink.
   2 - Latching switch mode. Indicated by 2 blinks.
   3 - Output enabled at power on mode. Indicated by a steadily lit LED.

6) After setting each output to the desired function, simply turn off the unit IGN PWR and wait approximately five seconds before powering the unit back up to verify proper output function.

## FAULT CONDITIONS

- Steady red LED = unit is functioning within design parameters.

- 1 blink repeating after 2 seconds (unless multiple faults) = Input under voltage fault.

- 2 blinks repeating after 2 seconds (unless multiple faults) = communications fault.